Data Sheet

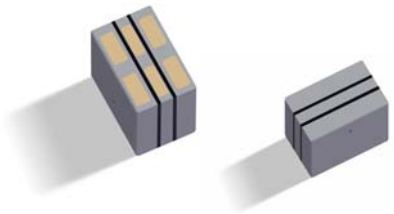

CAPACITIVE 2G ACCELERATION ELEMENT SCG10X-G001BI

Features

- Horizontal one axis accelerometer
- Small size (2.55 mm x 2.95 mm x 1.91 mm)
- Very low power consumption enabled by large parallel plate capacitance and high sensitivity
- No sticking problems due to high proof mass, high release forces and advanced materials
- High stability and accuracy over operating temperature range
- Hermetic structure
- Contacts can be formed either by wire bonding or by standard lead-free SMT
- 20 000 g shock survival
- Proven capacitive 3D-MEMS Technology
- RoHS compliant

Applications

- Acceleration measurement
- Inclination measurement
- Vibration measurement
- Motion measurement

General Description

SCG10X Series capacitive accelerometers, based on VTI's proven unique 3D-MEMS Technology, give a smart and simple way to realize horizontal measurement in low-g range (±2 g). Large parallel plate capacitance, high capacitance dynamics and high isolation resistance enables very low power consumption. SCG10X elements can be either wirebonded or soldered. In applications which require higher performance and/or accuracy wirebonding is recommended over soldering. In applications with lower performance requirements standard lead-free SMT process can be used to achieve uniformity and easiness to integration.

Absolut Maximum Ratings

Parameter	Max. Value	Unit
Maximum applied voltage across terminals	25	V
Maximum operating temperature	125	ºC
Minimum operating temperature	-40	ºC
Maximum storage temperature	150	ºC
Minimum storage temperature	-55	ºC
Mechanical shock	20 000/0.1s	g (MIL-STD 883E Method 2002.4
Electrostatic discharge[1]	150 100	V, HBM (AEC-Q100_002 Rev.C) V, MM (AEC-Q100-003 Rev. E)

Performance Characteristics

Parameter	SCG10X-G001BI	Unit
Measuring range	±2	g
Maximum measuring range	±3	g
Nonlinearity ±1g/±2g[2]	<2/<5	% of FS
Frequency response at ambient (-3dB)	typ. 45 min. 25 max. 70	Hz Hz Hz
Sensitivity temperature error[3]	±2% of RT value	

Electrical Characteristics

Parameter	Min	Typ	Max	Unit
Sensitivity Δ(C1-C2)/g[4]	0.45	0.65	0.9	pF
Recommended measuring voltage			0.5	V (p-p @ 100 kHz)
Total Capacitance	5.6	6.7	7.8	pF
Capacitance imbalance (C1-C2)	-0.65	0.0	0.65	pF
Passive capacitance	1.5	2.0	2.5	pF

Note: For customized product (for example sensitivity and frequency response), please contact VTI Technologies

---

[1] ESD precaution must be taken when handling and assembling the device.
Interface circuitry has to provide protection

[2] Deviation from linear response, static measurement, function (C1-C2)/(C1+C2), fitting to ±1 g

[3] Static measurement, bare element

[4] Approximate sensitivity based on electrostatic deflection

Electrical Schematic and Connections

Contact pads are wirebondable with gold or aluminum wire, although Au ball on element type of bonding is recommended over Al bonding.

Bonding parameters must be chosen carefully to avoid damage to the metal film or the sensor element. Higher ultrasonic frequency (eg. 120kHz) for wirebonding is preferred.

Element is solderable with tin-lead or lead-free solders.

Soldering of the leads should be made with impulse soldering method to the contact pads. 140...150 °C preheat is recommended. Minimum temperature (preferably ≤300°C) and time should be used in the soldering process. Mild flux should be used and any residue should be removed by the appropriate cleaning method.

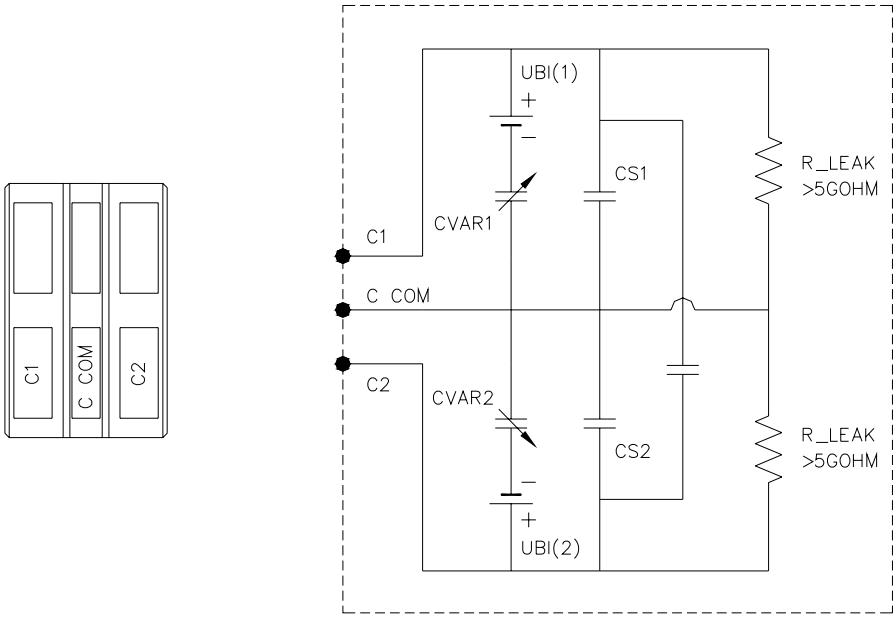

SCG10X Series sensing element equivalent circuit and connections

Mechanical Mounting and Environmental Protection

In humid conditions encapsulation with silicone gel or low stress conformal coating is recommended. Use unprotected element only in dry, clean ambient.

Mounting with flexible silicone is recommended especially in wide temperature range applications. The adhesive thickness should preferably be more than 50 μm. Other adhesives and mounting methods may be used but they may degrade the sensor performance. It is also recommended to use nonconductive adhesives for process control and reliability reasons (possible insulation layer breakage between silicon layers).

Note! The element does not withstand ultrasonic cleaning.

ESD shielding

This product is ESD sensitive and can be easily damaged by ESD Voltage. It is requested that the ESD dry-pack be opened only within an ESD Protected Area. It is also requested that the product be handled in ESD Protection Area to prevent any ESD damage.

Handling of an ESD sensitive product:
- Open dry-pack only under ESD controlled conditions
- Wear a wrist strap
- Use ESD foot wear (Rg < 35MΩ)
- Use ESD clothing (Rp < 1TΩ)

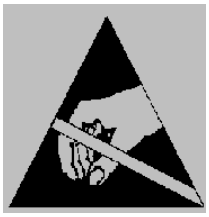

Reference to the standard EN-61340-5-1 or ANSI/ESD S20.20-1999

Dimensional Drawing
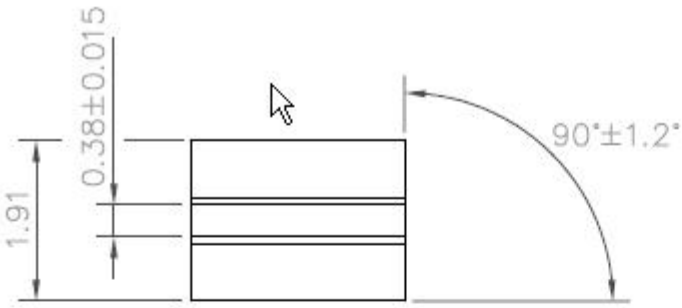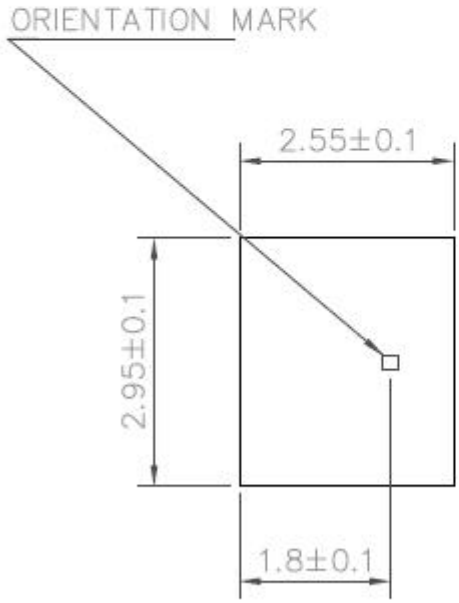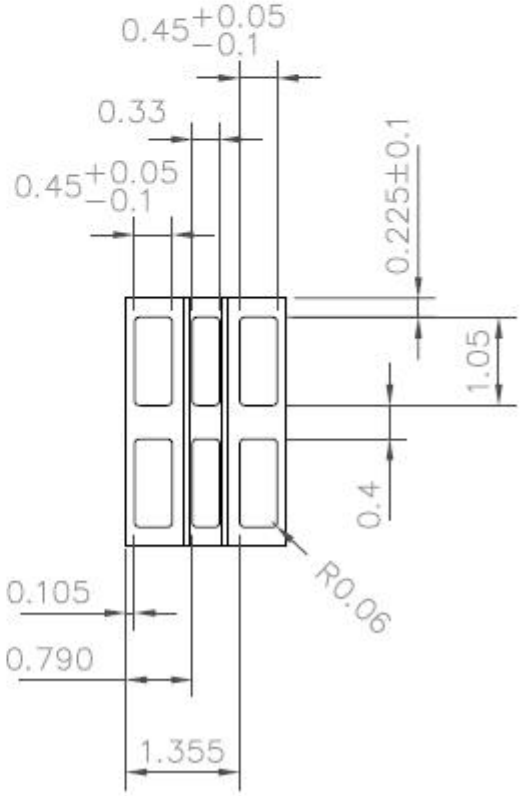
SCG10X-G001BI (contact pads Ti/Pt/Au - 125nm/225nm/125nm)